CONNEX ELECTRIC MOTORS

CSSTFIR18-056-12-575V

Stainless Steel * TEFC * Three Phase Motor

NEMA Design B * High Efficiency * IP55 Protection * Squirrel Cage AC Motor

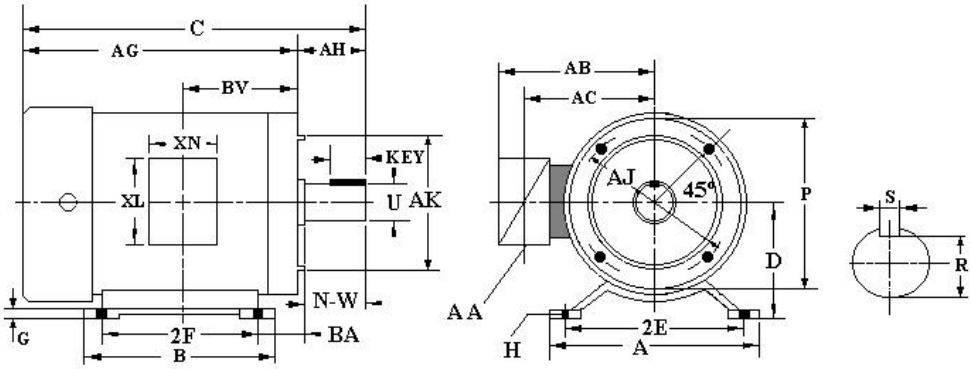

DIMENSIONAL DATA

MOUNTING							CONDUIT BOX				
D	E	2F	A	B	BA	H	AB	AC	XL	XN	AA
3.5	2.44	3	6.5	6.5	2.75	1.22X.34	5.75	4.25	4.72	3.8	0.86
MOTOR DIMENSIONS					KEYSEAT				BEARING		ENCL.
C	AH	AJ	AK	N-W	U	R	S	KEY	DE	ODE	
11.59	2.06	5.875	4.5	1.88	0.625	0.517	0.188	1.41	6205Z	6205Z	TEFC

PERFOMANCE DATA

50/60 Hz * Class F Insulation * 40°C Ambient * Continuous Duty * 1.15 Service Factor

HP	Frame	Full Load RPM	Efficiency%			Power Factor		Amps@460V		Full Load Torque	Locked Rotor Torque %FLT	Full Out Torque %FLT	APP. WEIGHT
			100% F.L.	75% F.L.	50% F.L.	100% F.L.	75% F.L.	Full Load	Locked Rotor				
1/2	56C	1725	83%	77%	72%	0.76	0.68	0.75	4.8	1.5	250%	347%	29
VAC	575V		INVERTER RATED 10:1										

CONNEX INDUSTRIAL CORP.
4975 AVALON RIDGE PKWY, SUITE 200, PEACHTREE CORNER, GA 30071
TOLL FREE: 1-877-884-2910 TEL: 770-248-9588 FAX: 770-248-9589
www.connex-electric.com